CX23102 Broadcast USB Audio/Video Decoder

Features

- USB 1.1/2.0 compliant bus
- Support for the following audio formats: Stereo, Mono, Dual Language (Mono), Tri Language (Trivox)
- Three I^2C master ports (two ports are provided for a two-tuner design to isolate I^2C transactions to reduce noise)
- Macrovision 1.0 Detection Compliant
- Support for the following video formats: Composite, S-Video, 480i YPrPb, RBG Packed, YCrCb Packed, 10-bit Packed, and YCrCb/YUY2 Format
- Advanced consumer IR functionality enables systems to receive, learn, and blast IR signals
- High-quality multi-tap horizontal and vertical image scaler for decoded video or 4:2:2 sources
- I^2S out
- Auxiliary Phase Locked Loop (PLL) clock for general use
- Integrated analog demodulator compatible with direct IF tuners
- Worldwide audio and video decoding
- Automatic video and broadcast audio standards detection and configuration
- Flexible video input MUX supporting composite, S-Video, and component inputs with integrated anti-alias filtering
- Integrated sigma-delta stereo audio ADCs with 4:2 MUX
- Audio sample rate converters on all inputs and outputs
- Two MPEG transport stream ports: Parallel and Serial
- Two program stream inputs accommodating serial or parallel interfaces
- Programmable VBI data slicer for data services such s closed caption, WSS, and program guides, such as GEmstar 1x & 2x
- ITU-R BT.656 output port
- Demodulator low or high IF for direct IF tuners

Overview

The CX23102 brings Conexant's long heritage of audio and video capture solutions to systems that enable universal serial bus architectures. The CX23102 integrates all the functions required to perform television and external
A/V capture on personal computers or consumer electronic devices.

The CX23102 decoder enables the capture of analog and digital broadcast streams on personal computers through an integrated Universal Serial Bus (USB) interface. The device can capture a single analog stream, two simultaneous digital television transport streams, or a combination of analog and digital programming. In addition, analog, hybrid and combo configurations may be used in conjunction with hardware MPEG encoders.

The CX23102 integrates anti-aliasing, noise rejection filters and automatic gain control (AGC) and also includes an integrated analog IF demodulator compatible with low IF tuners. Quality video is accomplished by using 10-bit video ADCs, a full 10-bit video data path, and a horizontal and 5-tap vertical scaling, hue, brightness, saturation, and contrast controls.

For high-quality audio, the CX23102 has analog to digital converters for stereo audio capture and a minimum of 16-bit audio resolution through the entire audio data path which ensures high fidelity audio, whether it comes from the integrated broadcast audio decoder or the ADCs. The audio path includes an automatic volume control function and two assignable stereo processing units for control of volume, three-band equalization, and balance. The level of audio and video integration provided by the CX23102 removes the need for additional broadcast audio decoding and processing chips or external sound demodulation chips. It also reduces the overall bill of materials (BOM) for the system developer, without compromising audio and video performance.

Part Number CX23102

Description USB Broadcast Audio/ Video Decoder

Conexant Systems

Block Diagram

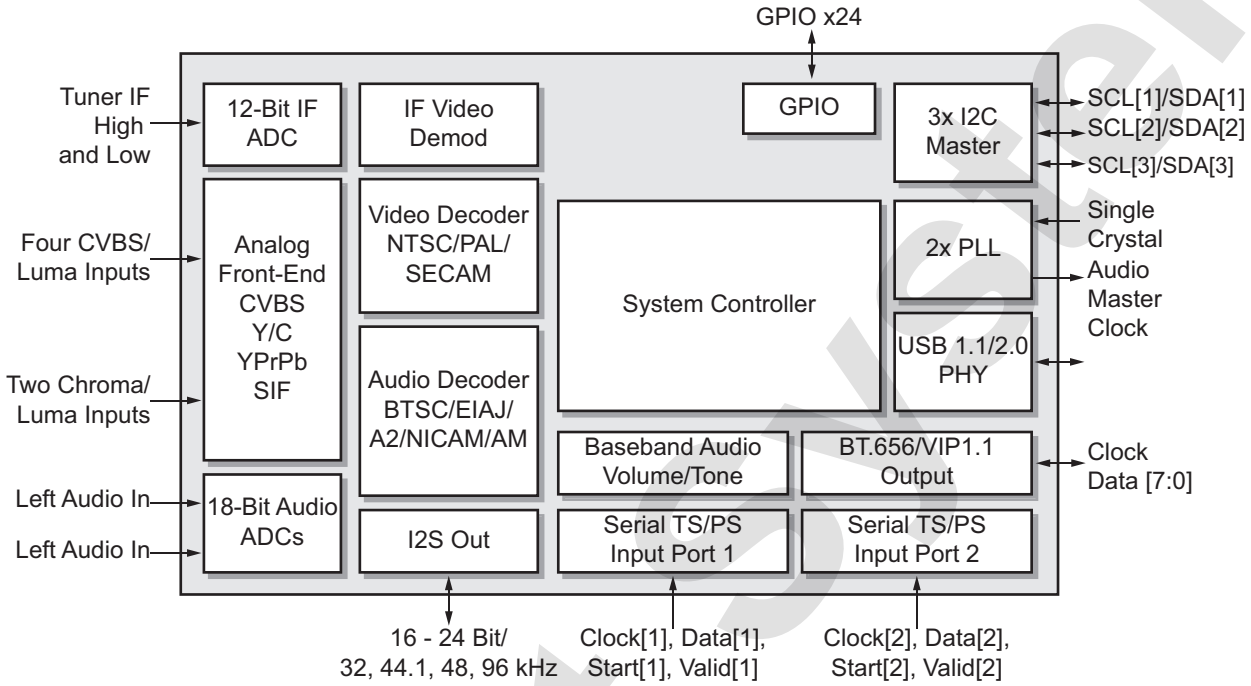

© 2012 Conexant Systems, Inc. All Rights Reserved. Conexant and the Conexant logo are registered trademarks of Conexant Systems, Inc. All other trademarks are owned by their respective owners. Although Conexant strives for accuracy in all its publications, this material may contain errors or omissions and is subject to change without notice. **THIS MATERIAL IS PROVIDED AS IS AND WITHOUT ANY EXPRESS OR IMPLIED WARRANTIES, INCLUDING MERCHANT ABILITY, FITNESS FOR A PARTICULAR PURPOSE AND NON-INFRINGEMENT.** Conexant shall not be liable for any special, indirect, incidental or consequential damages as a result of its use.

www.conexant.com
General Information:
U.S. and Canada: (888) 855-4562
International: 1+ (949) 483-3000
Headquarters
4000 MacArthur Blvd.
Newport Beach, CA 92660

Doc# PBR-201370

CONEXANT

Conexant Systems